Detection of Polarization Entanglement after 75 km of Fiber Transmission

A. Poppe (1), H. Hübel (1), T. Lederer (1), A. Fedrizzi (1), M.R. Vanner (1) and A. Zeilinger (1,2)
1 : Institut fuer Experimentalphysik, Universitaet Wien, Boltzmanngasse 5, 1090 Wien, Austria
andreas.poppe@univie.ac.at
2 : Institute for Quantum Optics and Quantum Information, Austrian Academy of Sciences, Boltzmanngasse 3, 1090 Wien, Austria

Abstract *Polarization entanglement was measured over 75 km of singlemode fiber. In the first 60 km only minimal degradation of polarization entanglement was observed leaving sufficient visibility for secure quantum communication.*

Introduction

Quantum key distribution (QKD) systems based on weak coherent pulses are nowadays possible to be integrated into typical communication systems. Here we present a method to surround a QKD system based upon entangled photon pairs with associated electronics and multiplexers to fit standard telecommunication requirements. The typical overall scheme is shown in figure 1 where a standard single mode dark fiber (without amplifiers) is needed to bridge the distance between the two communicating parties, Alice and Bob. Additionally both parties must have access to a TCP/IP connection. A multiplexer is used to combine the quantum channel and time critical signals (control and trigger signal) together to form a connection.

Usually the fragile quantum signal is the limiting factor for the maximal distance between Alice and Bob. Previously it was thought that dispersion effects, mainly polarisation mode dispersion (PMD), in optical fibers will limit the use of polarisation entanglement as a resource for long distance quantum communication.

We report the distribution of quantum correlations over a record length of 60 km in optical fibers with such high quality that it would be possible to extract a secret key without background subtraction.

The source

For experiments requiring a long distance quantum channel between the parties, the choice of the transmitting medium has to be addressed. In the case of optical fibers the lowest attenuation of the signal is achieved by using wavelengths in the telecom window (1310, 1550 nm). However the single photon detectors (APD) used in this regime are still a factor of 4 less efficient than their counterparts in the optical and near infrared.

To take advantage of both, the low loss in the telecom band and the high detection efficiency in the near infrared, our source produces non-degenerate photon pairs at 810 and 1550 nm respectively.

A periodically poled KTP crystal is pumped with a 532 nm cw-laser. The crystal is quasi-phase-matched to yield a signal (810 nm) and an idler (1550 nm) photon via the process of type-I (both emitted photons have the same polarization) spontaneous parametric down-conversion. Temperature control of the crystal allows tuning the emission cones towards a co-linear geometry at the desired wavelength. This is important for achieve high coupling efficiencies into single mode fibers.

If two such crystals are placed adjacent and orthogonal then polarisation entanglement can be

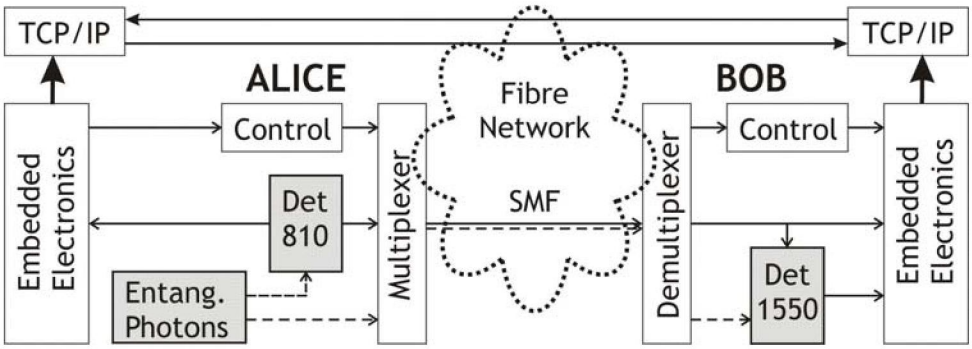

Fig. 1: Sketch of the generalized system. The building blocks of the quantum systems are highlighted with grey background. The source of entangled photon pairs (Entang. Photons) is located at Alice where the 810nm photon of the pair is measured (Det 810). The other photon is transmitted to Bob over a single mode fibre (SMF) to his detector (Det 1550). When Alice detects a photon, an optical trigger pulse is sent to Bob over the multiplexer to establish a time reference. The detector events and synchronization pulses are fed on both sides into an electronic hardware which performs all necessary QKD operations to yield the secure key. The necessary classical communication is usually done over TCP/IP connection. Additionally, some control signals are needed at both sides.

created [1]. A pump photon can decay in the first or second crystal generating a coherent superposition of horizontal and vertical polarized photon pairs.
The signal photon is detected locally with a standard Si-APD, whereas the idler is coupled into a fiber and sent over long distances. In our case, the detection of a signal photon is used to trigger a InGaAs detector which opens a 2.5 ns gate to allow coincidence detection of the corresponding entangled idler photon.

Count rates

By carefully matching the spatial distribution of the signal photons with the core of single mode fibers, we achieve very high collection efficiencies. The source is very bright [2, 3], with a detected signal rate of 100 kHz per mW pump power. Likewise the optics coupling the idler photons into single mode fibers, is matched to yield a maximal overlap with the signal photons. In this way, a pair detection efficiency of more than 50 % was seen.

The measured coincidence rate, including detector efficiencies and losses, is about 3 kHz/mW.
The quality of the entanglement was measured in the H/V and +45°/-45° basis. It was found to be 99% in both basis after subtraction of background counts [3]. The bandwidth of the signal photon is limited by an 1 nm FWHM band-pass filter. On the idler side we employ a 400 GHz in-fiber filter.

Long distance measurements

For the long distance measurements we increased our pump power to 14 mW. At this level we measured approximately 1 MHz of trigger singles (saturation limit of detector) and 30 000 coincidences locally. Since we knew that dispersion would limit our performance we employed non zero dispersion shifted fibers (NZDS) for the transmission. The count rates of the correlations and the visibility were taken after each reel of fiber (25.2 km and 12.6 km). Figure 2 shows the count rate, qubit error rate (QBER) and secure bit rate up to 75 km, where limitations arise from background counts (accidental coincidences due to unavoidable double pair events). The secure key is the final key which can be used to encrypt messages, a function of the raw counts and the QBER.

The main factor for the increasing QBER is the measured counts approach the dark counts of the detector (15 Hz), where depolarization within the fiber has minor contribution. The error rate rises to 7 % at 60 km showing the current limitation of the system. In

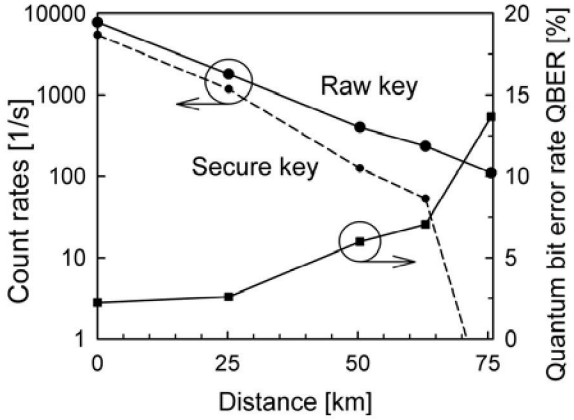

Fig 2: Raw key rate, measured QBER and calculated secure key rate as a function of fiber length. The fast roll-off of the secure key is typical for that distance where the dark count of the detector causes the QBER to exceed its limit of 10.8%.

the near future we expect to improve both count rates and error rate, allowing us to generate a secrure key over longer distances.

We also measured the QBER as a function of PMD using polarization maintaining fibers. We could show that the QBER remained unaltered up to a threshold of 1 ps of first order PMD for a 400GHz filter [3]. The fibers used in this setup are modern communication fibers and have an average PMD value of 0.04 ps/√km. These low values could routinely be reached only a few years ago and would extend the possible reach of polarization based QKD based on a modern fiber structure to distances exceeding 100 km.

Conclusions

We have shown for the first time that quantum mechanical correlations, encoded in the polarization degree of freedom of photons, can be transmitted over long distances (75 km) in optical fibers. The polarization does not significantly degrade over these distances demonstrating that the optical fibers do not have a large adverse effect on polarization entanglement. Together with the potential application in Quantum Cryptography and at the atom-photon interface, we believe that polarization entangled photons transmitted in fiber will be a very powerful tool in future quantum communication experiments and technologies.

References

1 P.G. Kwiat et al., *Phys Rev. A*, **60** (1999), R773
2 M. Pelton et al., *Optics Express*, **12** (2004), 3573
3 H. Hübel et al., in preparation